DYNA
http://dyna.medellin.unal.edu.co/

UNIVERSIDAD NACIONAL DE COLOMBIA

Dashboard for assessing patient flow management in hospital institutions

Yasniel Sánchez-Suárez [a], Verenice Sánchez-Castillo [b] & Carlos Alberto Gómez-Cano [c]

[a] *Facultad de Ingeniería Industrial, Universidad de Matanzas, Matanzas, Cuba. yasnielsanchez9707@gmail.com*
[b] *Facultad de Ingeniería, Universidad de la Amazonia, Florencia, Colombia. ve.sanchez@udla.edu.co*
[c] *Dirección de Investigaciones, Corporación Unificada Nacional de Educación Superior, Florencia, Colombia. carlos_gomezca@cun.edu.co*

Received: September 22th, 2023. Received in revised form: April 1st, 2024. Accepted: April 4th, 2024.

Abstract
Proactive control of hospital processes significantly influences patient performance and satisfaction. The objective of the research is to develop a dashboard for the evaluation of patient flow management in hospital institutions. Descriptive quantitative study was developed and previous methodologies were analyzed. A procedure was developed for the preparation of a dashboard for the evaluation of patient flow management in hospital institutions, structured in five stages and nine steps, including procedures for the identification of key variables and aggregation of indicators. A dashboard was prepared for the General Surgery service of a Clinical Surgical Teaching Hospital, which is composed of 18 indicators, 6 synthetic indexes and an integral indicator. The integral indicator obtained a value of 0.79 (4), which shows the effectiveness of the actions implemented during the deployment of the improvement model. Among the positive implications for health managers is the possibility of monitoring strategies with a process vision.

Keywords: management control; patient flow; hospital management; indicators; dashboard.

Tablero de control para evaluar la gestión de los flujos de pacientes en instituciones hospitalarias

Resumen
El control proactivo de los procesos hospitalarios influye de forma significativa en el rendimiento y satisfacción de los pacientes. El objetivo de la investigación es desarrollar un tablero de control para la evaluación de la gestión del flujo de pacientes en instituciones hospitalarias. Se desarrolló un estudio cuantitativo descriptivo y se analizaron metodologías precedentes. Se elaboró un proceder para la confección de un tablero de control para la evaluación de la gestión de los flujos de pacientes en instituciones hospitalarias, estructurado en cinco etapas y nueve pasos, incluye procedimientos para la identificación de variables clave y agregación de indicadores. Se confeccionó un tablero de control para el servicio de Cirugía General de un hospital Clínico Quirúrgico Docente, que está compuesto por 18 indicadores, 6 índices sintéticos y un indicador integral. El indicador integral obtuvo un valor de 0,79 (4), lo que es muestra de la eficacia de las acciones implementadas durante el despliegue del modelo de mejora. Entre las implicaciones positivas para los gestores sanitarios está la posibilidad de monitorear las estrategias con una visión de proceso.

Palabras clave: control de gestión; flujo de pacientes; gestión hospitalaria; indicadores; tablero de control.

1 Introduction

Hospital management has evolved from the traditional vision to a process approach with greater patient participation in care, an element that marks a before and after in the development of the quality of health services [1,2]. This management should be developed according to the characteristics of its environment and patients who demand these services, by considering parameters of flow, rhythm and evolution of the care network, with responses in accordance with the care model, flexible, timely and effective [3].

How to cite: Sánchez-Suárez, Y., Sánchez-Castillo, V. and Gómez-Cano, C.A., Dashboard for assessing patient flow management in hospital institutions. DYNA, 91(232), pp. 49-57, April - June, 2024.

Hospital services must be planned [4], organized [5], managed [6] and controlled [7], in order to increase their performance. Among the tools widely used in the sector is management control. Hospital management control helps to understand the conditions of the institution and its processes in terms of meeting strategic goals [8,9].

The balanced scorecard is emerging as a proactive management tool that takes a strategic approach to management [10,11], its deployment generally contemplates the following perspectives: financial, customer, internal processes, and learning and growth [12].

For the operational control of processes, dashboard have been created to monitor the specific management [13]. They are of great importance in the management of patient flows by allowing operational decisions to be made in order to optimize patient trajectories through a healthcare organization, it also allows a diagnosis of the behavior of patient flow management, as an alternative to those proposed in other studies [14].

Patient flow refers to the movement of patients through care areas in order to receive treatment [15]. Its management is holistic in nature, as it influences the entire system [16], it takes into account the patient's criteria regarding the perceived quality during its trajectory [17], and it is influenced by efficient capacity planning based on flow demand forecasting [18]. The main objectives of its management are: reducing patient waiting time, reducing hospital stay, optimizing capacity, improving patient satisfaction and hospital performance [19].

Duarte Forero et al [20] identifies three main flows to the hospital service:

- Elective patients flow, usually transiting through departments or external services (outpatient).
- Urgent patient flow, usually presented by on-call or emergency services.
- Patients flow referred to inpatient services from other levels of care.

Different analysis and improvement tools have been used for patient flow management, among them mathematical modeling, which requires a correct characterization [21] and classification of patients [3]. Discrete event simulation models [22-24], system dynamics [25], agent-based simulation [26], queuing theory [27], Markov and compartmental models [28,29] have been developed.

These models make it possible to optimize hospital capacity and align strategies based on the results obtained and the improvements modeled [30], elements that in turn optimize the use of resources, minimize waste and optimize processes by parallel activities [31].

An analysis of patient flow management methodologies (Table 1) summarizes the main elements:

- Among the tools most commonly addressed in the methodologies are discrete event simulation and linear, integer and dynamic programming.
- Lean manufacturing has been developed to eliminate all those activities that do not generate value to patient treatment.
- Capacity scheduling in hospital systems and its influence on resource optimization.
- They use isolated indicators to evaluate the management of patient flows but there is no evidence of the conception of an integral indicator that contemplates all the variables that influence patient flows.

Table 1.
Analysis of methodological procedures for the patient flows management.

Tool/ Author	Medina León et al [32]	Gartner and Kolisch [33]	Pellizarri [34]	Armony et al [35]	Mathews and Long [36]	Chen et al [37]	Andersen et al [38]	Blouin Delisle et al [39]	Duarte Forero & Camacho [20] Oliveros	Vali et al [40]
Linear programming		X				X	X			X
Operations management			X							
Exploratory data analysis				X						
Queuing theory				X	X					
Simulation	X				X	X	X		X	
Discrete programming		X								
Lean manufacturing			X					X		
Resource allocation					X	X				
Capacity planning						X				
Markov models							X			
Indicators									X	
System dynamics									X	
Total	**1**	**2**	**2**	**2**	**3**	**4**	**3**	**1**	**3**	**1**

Source: Own elaboration.

The hospital taken as a reference for the application of the research is a second level hospital, Teaching Surgical Clinic, which has a well-structured strategic planning, but there have been problems in the fulfillment of goals and objectives that influence its evaluation in terms of compliance with specific quality standards. Based on interviews with managers (representatives of key result areas), there is evidence of the need for alignment between the strategic and operational levels, through the monitoring of specific indicators in each of the services.

On the other hand, a review of the audit reports reveals problems due to patient dissatisfaction, functional focus in the management of activities and lack of motivation among the staff, an element that arouses the interest of the evaluators and the institution's quality personnel.

Based on brainstorming in the boards of directors, the need to proactively control critical control points in the hospital's services is identified, through a management approach to patient flows focused on their trajectory as an element that influences performance and patient satisfaction.

Consequently, the objective of the research is to develop a dashboard for the evaluation of patient flow management in hospital institutions.

2 Methodology

Methodologies for the construction of Balanced Scorecard (BSC) and Dashboard have been developed and

adapted to the characteristics of production and service systems [41]. Hospitals are increasingly using indicators to measure the performance of their processes [42].

Methodologies that have focused on the conception of a dashboard for monitoring indicators and consider patient flows as a variable of importance and impact on hospital performance are taken as a reference:

- Sexton et al [43] proposes a patient dashboard in the electronic medical record for use during communication between nurses in an operating room. Although the methodology focuses on the patient and the optimization of length of stay, it does not take into account transfers and the management of interactions with other processes present in the patient's trajectory.
- Alhabib et al [44] implements a dashboard for measuring the satisfaction of emergency employees, with the objective of evaluating the elements used in the service. The dashboard does not focus on patient journey management. The importance of specialist criteria in future design and implementation is highlighted.
- Kenigsberg et al [45] developed an internal dashboard to facilitate visualization and quick reviews of automated weekly vaccine safety surveillance big data. They include a set of variables to group key indicators, they do not show how to group those variables into synthetic and comprehensive indices.
- Cinelli et al [46] designed a dashboard to track licensing requirements and Drug Enforcement Administration requirements, the dashboard decreases patient wait times. Although it improves indicators related to patient flows, it does not focus on internal indicators that influence service performance.
- Franklin et al [11] propose a methodology that focuses on timely and efficient care in the emergency department, takes into account individual characteristics, although they consider variables such as flow coordinators to reduce the length of stay of patients, implement a prototype of a performance panel to monitor operational indicators in real time.

Although the methodologies show the potential of dashboard for monitoring indicators and improving process performance, they do not focus on a methodological procedure for their preparation. Based on the gaps found, a procedure is proposed for the construction of a dashboard to evaluate the performance of patient flows in the process under study, in addition to allowing the detection of gaps and deviations. It is structured in five stages and nine steps (Fig. 1).

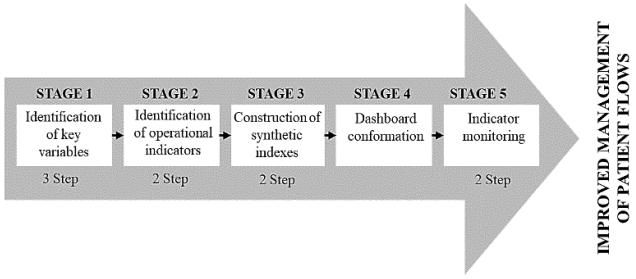

Figure 1. Procedure for the preparation of the dashboard.
Source: Own elaboration.

It is focused on the monitoring of operational indicators of hospital services, in such a way as to allow the heads of services to monitor the related key indicators and their alignment with the strategic indicators at the institutional level, an element that is in line with other telemedicine and health monitoring research [47].

The methodology is of a descriptive quantitative type, and its application was carried out in the General Surgery service, in a second level hospital (Clinical Surgical Teaching Hospital), from June to December 2022.

2.1 Description of the procedure

2.1.1 Stage 1. Identification of key variables

Objective: to identify variables that define the behavior of patient flows in the selected services.

Step 1. Identification and selection of variables

Based on a systematic review of the literature, variables used in research to characterize the management of patient flows are identified, listed and refined according to the specific characteristics of each department. The selection should consider those variables with the highest frequency of occurrence, which should be clearly and precisely defined.

Step 2. Variable consultation with experts

The variables previously identified in the literature should be presented to the experts and specialists of the service, so that they can validate the variables by consensus. The experts may add or delete any of the variables previously found.

Step 3. Definition of the objectives of the variables

When defining the objectives for key variables, the institution's specific goals and objectives must be taken into account to ensure management alignment.

2.1.2 Stage 2. Identification of operational indicators

Objective: to identify operational indicators that describe the behavior of key service variables.

Step 4. Selection of indicators

This research uses the procedure proposed by Hernández Nariño and Marqués León [48], which consists of five steps: collecting indicators used in the process, by specialists, and in the literature, reducing the list of indicators, selecting the indicators.

Step 5. Association of indicators with key variables

For their relationship, it should be taken into account that the indicator and the variables have the same management objective and goal, and that the set of indicators as a whole should represent the key variable.

2.1.3 Stage 3. Construction of synthetic indexes

Objective: to assign a weight to the key variables defined in the management of the service's patient flows.

Step 6. Calculation of mathematical coefficients

The coefficients for each of the variables make it possible to give them a priority in management. The Analytical Hierarchical Process (AHP) is developed in the research. For its deployment, subjective evaluations of the experts are needed regarding the relative importance of each of the indicators of the variable, the levels of consistency are evaluated from the consistency index that must have values lower than 0.10.

Step 7. Formation and calculation of the quantitative index

The proposed integral index was calculated arithmetically, using an additive function, which compares the maximum level reached by each of the synthetic indexes with that of the service at the time of measurement. Eq. (1) was used for the calculation.

$$IIFP = \frac{\sum_{j=1}^{Q} P_j * V_j}{5 \sum_{1}^{Q} V_j} \quad (1)$$

Where:

- IIFP: Comprehensive Patient Flow Index.
- Pj: score of the j-th indicator.
- Vj: relative weight of the j-th indicator.
- Q: number of indicators to be included in the index.

For the evaluation of the proposed integral indicator, a rating scale is proposed (Fig. 2). The scale takes values from 1 to 5, based on the analysis of the behavior of previous indicators studied. In the normalization of the indicator, the desired value or purpose, the ranges for each purpose and the indicator's score on the scale should be made clear. Hernández Nariño [49] and Ramos Castro [50] were used as a reference. The scale can be improved according to the characteristics of the services studied.

2.1.4 Stage 4. Dashboard conformation

Objective: to propose a software tool that makes the calculation of indicators and their analysis proactively feasible.

With the indicators classified and validated by the experts, we proceeded to build the dashboard. The dashboard will show an operational view of the management of flows, and should be easy to interpret by specialists and managers, and practical to ensure the familiarization of personnel with it in short periods of time. It should include the institution's logo, a tab to identify the selected service or object of analysis, pivot tables and graphs to be selected according to the specific context.

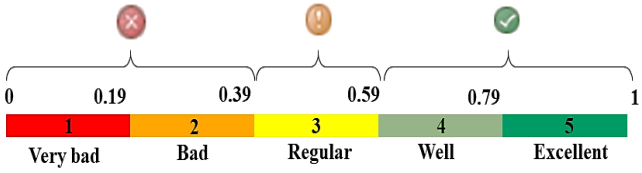

Figure 2. Synthetic and comprehensive index valuation scale.
Source: Own elaboration.

2.1.5 Stage 5. Indicators monitoring

Objective: to monitor the behavior over time of the indicators on the dashboard.

The follow-up allows management to proactively analyze the negative behavior of the indicators with respect to the target values and take measures to channel them to the desired goals. The dashboard should also be designed to ensure the best alignment with the organization's strategy.

Step 8. Search for causes of poor performance of the integral indicator

Here the integral indicator is disaggregated to its minimum expression (synthetic indicators and indicators), with the objective of identifying cause-effect relationships.

Step 9. Reduction of failures during the implementation of corrective actions

Some of the techniques that can be used for the initial collection of existing problems are: interview, observation, survey, document review, the Delphi Method and the multi-attribute and multi-criteria methods, which will be selected according to the specific conditions of each process and according to the scope of the corrective action. For the reduction of the list of failures in the research, the Kendall's coefficient method is used.

3 Discussion of results

The following results were obtained from the application of the proposed procedure for the preparation of a dashboard to evaluate the patient flows management in hospital institutions.

3.1 Stage 1. Identification of key variables

Step 1. Identification and selection of variables

From the analysis of 27 methodologies focused on patient flow management, seven variables were identified: sequence of activities (74.1 %), focus on the trajectory (88.9 %), system capacity (92.6 %), service demand (77.8 %), computerization (55.6 %), personnel qualification (59.3 %) and contingency policy (7.4 %). The variables with the highest frequency of occurrence were the first six, since contingency policies only appeared in two studies, with special relevance in the Covid-19 period. The research considers the rest of the variables identified as cross-cutting.

Step 2. Variable consultation with experts

At a working meeting, the variables were presented to the experts, who considered them valid for characterizing patient flows in hospital institutions.

Step 3. Definition of the objectives of the variables

Table 2 shows the objective of each key variable identified.

3.2 Stage 2. Identification of operational indicators

Step 4. Selection of indicators

From the literature review, 27 indicators were initially identified; the specialists recommended including three indicators related to the process; the Delphi method was used to reduce the list of indicators and 18 indicators were selected.

Table 2
Key variables objectives.

Variable	Objective
Activity sequence	Develop actions to carry out activities in a logical and orderly manner.
Focus on trajectory	Ensure the continuous nature of patient flow with a focus on trajectory.
System capacity	To guarantee the availability of resources based on the quality of medical actions in hospital institutions.
Service demand	To quantify the amount of medical care provided to a population by one or more providers over a period of time.
Informatization	Computerize hospital processes for effective decision making.
Personnel qualification	Strengthen the qualification of health personnel in order to improve the quality of care.

Source: Own elaboration.

Table 3
List of indicators and key variables.

Code	Key Variable	Code	Indicator selected
IS-SA	Activity sequence	SA-01	Average waiting time for medical discharge
		SA-02	Number of interruptions
IS-ET	Focus on trajectory	ET-03	Average waiting time per medical procedure
		ET-04	Waiting time for diagnostic support activities
		ET-05	Average waiting time per nursing procedure
		ET-06	Unambiguous patient identification
IS-CS	System capacity	CS-07	Bed occupancy rate
		CS-08	Average length of hospital stay
		CS-09	Emergency waiting time
		CS-10	Operating room availability
IS-DS	Service demand	DS-11	External customer satisfaction
		DS-12	Percentage of outpatient surgeries
		DS-13	Number of patients on surgical waiting list
IS-I	Informatization	I-14	Capacity of computerization systems
		I-15	Total hospital services computerized
IS-CP	Personnel qualification	CP-16	Internal customer satisfaction
		CP-17	Medication error rate
		CP-18	Adverse event rate related to patient misidentification.

Source: Own elaboration.

Step 5. Association of indicators with the key variables
Table 3 shows the grouping of indicators by key variable.

3.3. Stage 3. Construction of synthetic indexes

Step 6. Calculation of mathematical coefficients
The Hierarchical Analytical Process was applied by means of joint elaboration among the experts, who issued their criteria with respect to the paired comparisons that allow quantifying the role played by each indicator in the corresponding synthetic indexes. Table 4 shows an example of the weights for each synthetic indicator by key variable that make up the integral indicator of patient flows, with a consistency index of 3.4 % below 10 %, which shows the consensus among the experts.

Table 4
Weights for comprehensive patient flow index.

Criterion (indicator)	Weight (W)	Standard deviation (±)
Activity sequence	14,0 %	5,0 %
Focus on trajectory	20,8 %	4,4 %
System capacity	25,3 %	8,0 %
Service demand	25,3 %	8,0 %
Informatization	6,3 %	1,8 %
Personnel qualification	8,3 %	2,0 %

Source: Own elaboration.

Step 7. Formation and calculation of the quantitative index
From the analysis of the baseline measurement, it is concluded that the management of patient flows in the General Surgery service is good with an evaluation of 0.79 (4), which is a sample of the effectiveness of the actions implemented during the deployment of the model for improvement. However, out of the 18 indicators defined, 2 are evaluated as poor (11.11 %), 6 have a regular performance (33.33 %) and 10 are evaluated as good (55.56 %). None of the indicators was evaluated as excellent or very bad.

3.4 Stage 4. Dashboard conformation

A dashboard was designed (Fig. 3), the purpose values of the indicators are based on the flow of emergencies to the General Surgery service, and it acts as a traffic light, alerting with colors: red (bad or terrible behavior), green (good or excellent behavior) and yellow (regular behavior).

3.5 Stage 5. Indicators monitoring

Step 8. Search for causes of poor performance of the integral indicator
In order to search for the causes of poor performance of the integral indicator, an analysis of performance drivers was performed (Fig. 4).

Step 9. Reduction of failures during the implementation of corrective actions

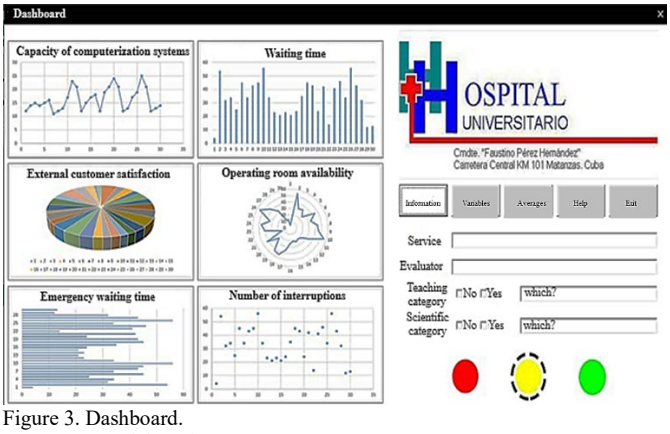

Figure 3. Dashboard.
Source: Own elaboration.

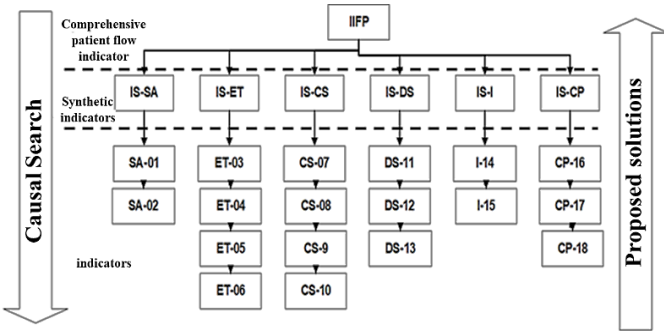

Figure 4. Analysis of performance inducers.
Source: Own elaboration.

Table 5
Failures identified during the implementation of improvements.

Key Variables	Identified faults
Activity sequence	✓ Deficiencies in medical records ✓ Need for a signage system in the hospital ✓ Interruptions in diagnosis-related activities or processes in elective patient flows ✓ Long waiting times for patients waiting for discharge.
Focus on trajectory	✓ Information and actions are not linked. ✓ Patient identification is not done correctly at admission.
System capacity	✓ Operations suspended due to lack of medical supplies. ✓ Deficiencies in medical supplies planning ✓ Scarce bed availability ✓ Unavailability of operating rooms
Service demand	✓ Dissatisfaction of patient escorts ✓ Low levels of planning of outpatient surgeries
Informatization	✓ Low levels of computerization ✓ Low levels of computer literacy of health care personnel to operate complex software ✓ Insufficient capacity of hospital systems
Personnel qualification	✓ Actions resulting in dissatisfaction with working conditions ✓ Shortages of medical staff related to anesthesiology services

Source: Own elaboration.

Based on the monitoring of the proposed indicators, a set of failures were identified during the execution of the improvement solutions (Table 5), which serve as a starting point for identifying the root causes of the negative behavior of the indicators.

To reduce the list and identify the main failures or deficiencies identified during the execution of the improvement proposal, the Kendall method was used, which allowed prioritizing seven failures that represent 38.89 % of the total identified, these are:

1. Deficiencies in medical records
2. Long waiting times for patients waiting to be discharged.
3. Patient identification is not done correctly at admission.
4. Scarce bed availability
5. Dissatisfaction of those accompanying patients.
6. Low levels of computerization
7. Shortage of medical personnel related to anesthesiology services.

Currently, with the development of information and communication technologies, institutions are seeking alternatives to improve their processes in order to generate competitive advantages [51], in this context, innovation plays a fundamental role in rethinking and restructuring ways of managing processes [52] and constitutes an alternative for health risk management [53].

The use of indicators to measure the performance of processes has made it posible to reduce subjetive decisions on improvement and to align strategies more and more with the visión, misión and organizational objectives [54], an element that is supported by García Peña et al [55] who emphasize the importance of monitoring indicators in management.

In correspondence with research, González López-Valcárcel and Ortún [56] show the importance of digital technologies and their influence on agile decision making in health services, in addition to reflecting the potential for integration and care coordination. On the other hand, Chen et al [57] demonstrated its usefulness in increasing hospital throughput by reducing patient waiting times between treatment stages. Artificial intelligence tools have also been developed to organize the high volumes of data generated by these control tools [58], an element that becomes an improvement opportunity for the proposed dashboard.

Esquer Rochin et al [59] it evidences the usefulness of dashboard in the understanding and implementation of improvement solutions. This research also provides a procedure for the creation of an integral indicator and analysis of inducers that allow the behavior of indicators to be channeled.

4 Conclusions

Six key variables were identified for the management of patient flows in hospital institutions, to which operational indicators were associated to support the proactive management of the process with a focus on the patient's trajectory and were aggregated in an additive function with the objective of creating a comprehensive indicator that allows the evaluation of management and the implementation of improvement solutions in hospital services.

A dashboard was created and a methodological procedure was proposed for its conception, which is flexible before future redesigns during the implementation process. It functions as a traffic light in the event of deviations from the values proposed in the synthetic indicators, and a root cause analysis was proposed to support the identification of root causes, which facilitates the work of specialists in decision-making.

The indicators were applied in the General Surgery service and a value of 0.79 (4) was obtained for the integral indicator, which indicates that the management of patient flows is good, and that the actions carried out to improve the trajectory and coordination of activities in a proactive manner have a tendency towards efficiency; however, of the 18 indicators, 2 are evaluated as bad, representing 11.11% of the total, 6 have a regular performance (33.33%) and 10 are evaluated as good (55.56%), while none was evaluated as excellent or very bad (55.56%), while none was evaluated as excellent or very bad (55.56%). 11 % of the total, 6 have a regular performance (33.33 %) and 10 are evaluated as good (55.56 %), while none was evaluated as excellent or very bad.

Among the limitations of the present study is that the dashboard only allows evaluating the management of emergency patient flows in hospital institutions, identifying as a gap the need to adjust the target values of the indicators identified in terms of elective patient flows, the research does not explicitly show how to align the dashboard with other strategic evaluation instruments of the institution. It was also considered important in future redesigns of the dashboard to insert indicators such as the occupancy rate (percent of total occupied beds) and the turnover interval (time elapsed between the discharge of a patient and the admission of another patient in the same bed).

Among the positive implications of the proposed dashboard for health managers is that it allows the tracking of indicators and historical studies related to the management of patient flows with a focus on the trajectory, allows monitoring and comparing strategies with a process vision among the different departments, allows evaluating the current state of management and its alignment with the objectives and goals of the institutional strategic planning, and facilitates decision making and reduces management errors.

4.1 Future research

In future research, it is recommended to redesign the dashboard, based on the improvement of the IIFP, with the possibility of using other management indicators related to the particularities of each of the hospital services, the different clinical management variables that influence patient flows and the purpose values for the evaluation of the indicators based on elective patient flows. In addition, to develop studies of control limits per variable for each of the indicators associated with these variables, which will make it possible to increase the precision of the scale of evaluation of the indicators and consequently readjust the measurements of the synthetic and IIFP.

References

[1] Jabalera, M., Pons, M., Gómez, E., and del Castillo, M., Hacia la excelencia en gestión hospitalaria. Un modelo de gestión estratégica, Journal of Healthcare Quality Research, 34(3), pp. 148-153, 2019. DOI: https://doi.org/10.1016/j.jhqr.2019.02.005

[2] Adriana-Roussel, P., Impacto de un modelo de gestión de la calidad de un servicio de inmunización del Hospital de Alta Complejidad. El Cruce, Salud, Ciencia y Tecnología, 2(44), pp. 1-14, 2022. DOI: https://doi.org/10.56294/saludcyt202244

[3] Sánchez-Suárez, Y., Instrumento metodológico para la gestión de flujos de pacientes de instituciones hospitalaria, PhD Thesis, Facultad de Ciencias Técnicas, Universidad de Matanzas, Matanzas, Cuba, 2023.

[4] Bouckaert, N., Van den Heede, K., and Van de Voorde, C., Improving the forecasting of hospital services: a comparison between projections and actual utilization of hospital services, Health Policy, 122(7), pp. 728-736, 2018. DOI: https://doi.org/10.1016/j.healthpol.2018.05.010

[5] Herlina, Madjid, M., Rusman, A.D.P., Sari, R.W., Noer, N.B., and Rivai, F., The application of the fast method needed in improving hospital services, Enfermería Clínica, 30, pp. 240-243, 2020. DOI: https://doi.org/10.1016/j.enfcli.2020.06.055

[6] Aluvalu, R., Mudrakola, S., Maheswari, U., Kaladevi, A.C., Sandhya, M.V.S., and Rohith-Bhat, C., The novel emergency hospital services for patients using digital twins, Microprocessors and Microsystems, 98, art. 104794, 2023. DOI: https://doi.org/10.1016/j.micpro.2023.104794

[7] Bahalkeh, E., Chiam, T.C., and Yih, Y., An interpretable clustering classification approach for assessing and adjusting hospital service lines, Healthcare Analytics, 4, art. 100255, 2023. DOI: https://doi.org/10.1016/j.health.2023.100255

[8] Georgescu, I., Management control literature and French public hospitals, Health Policy, 111(3), pp. 324-327, 2013. DOI: https://doi.org/10.1016/j.healthpol.2013.06.014

[9] Acero-Moreno, A.M., Ordoñez-Paredes, B.A., Toloza-Guardias, H.P., and Vega-Palmera, B., Análisis estratégico para la empresa Imbocar, seccional Valledupar – Colombia. Región Científica, 2(1), art. 202395, 2023. DOI: https://doi.org/10.58763/rc202395

[10] Fatima, T., and Elbanna, S., Advancing sustainable performance management in the hospitality industry: a novel framework based on a health-inclusive balanced scorecard, Tourism Management Perspectives, 48, art. 101141, 2023. DOI: https://doi.org/10.1016/j.tmp.2023.101141

[11] Franklin, A., Gantela, S., Shifarraw, S., Johnson, T.R., Robinson, D.J., King, B.R., Mehta, A.M., Maddow, C.L., Hoot, N.R., Nguyen, V., Rubio, A., Zhang, J., and Okafor, N.G., Dashboard visualizations: supporting real-time throughput decision-making, Journal of Biomedical Informatics, 71, pp. 211-221, 2017. DOI: https://doi.org/10.1016/j.jbi.2017.05.024

[12] Peralta-Llivipuma, M.R., Erazo-Álvarez, J.C., and Narváez-Zurita, C.I., Cuadro de mando integral, enfoque estratégico al proceso administrativo y educativo, Visionario Digital, 3(2.2), pp. 120-144, 2019. DOI: https://doi.org/10.33262/visionariodigital.v3i2.2.627

[13] Sakly, H., and Ben-Jeddou, K., Development and implementation of dashboard in the Pharmacy Department at University Hospital, Le Pharmacien Clinicien, 57(1), pp. 6-15, 2022. DOI: https://doi.org/10.1016/j.phclin.2021.09.002

[14] Sánchez-Suárez, Y., Marqués-León, M., Hernández-Nariño, A., y Suárez-Pérez, M.M., Metodología para el diagnóstico de la gestión de trayectorias de pacientes en hospitales, Región Científica, 2(2), art. 2023115, 2023. DOI: https://doi.org/10.58763/rc2023115.

[15] Torres-Moreno, G.C., y Velasco-Peñaloza, J.C., Aplicación de la metodología BMP e instrumentos Lean para evaluación del flujo de pacientes en el área de servicios quirúrgicos. Estudio de caso: hospitales de alta complejidad, Tesis de grado, Ingeniería Industrial, Universidad Santo Tomás, Colombia, 2020.

[16] Manning, L., and Islam, S., A systematic review to identify the challenges to achieving effective patient flow in public hospitals, Int J Health Plann Mgmt, 38(3), pp. 805-828, 2023. DOI: https://doi.org/10.1002/hpm.3626

[17] Castillo, C.Y., Patient's perception of the quality of care in the Ambulatory Surgery Unit of the Polyclinic Hospital of the western area of the Metropolitan Area of Buenos Aires, Salud, Ciencia y Tecnología, 3, art. 504, 2023. DOI: https://doi.org/10.56294/saludcyt2023504.

[18] Lees-Deutsch, L., and Robinson, J., A systematic review of criteria-led patient discharge, J Nurs Care Qual, 34(2), pp. 121-126, 2019. DOI: https://doi.org/10.1097/NCQ0000000000000356

[19] Alhaider, A., Lau, N., Davenport, P., and Morris, M., Distributed situation awareness: a health-system approach to assessing and designing patient flow management, Ergonomics, 63(6), pp. 682-709, 2020. DOI: https://doi.org/10.1080/00140139.2020.1755061

[20] Duarte-Forero, E.L., y Camacho-Oliveros, M.Á., Planeación de la capacidad hospitalaria: un enfoque desde el flujo de pacientes con Dinámica de Sistemas, INGE CUC, 16(1), pp. 217-233, 2020. DOI: https://doi.org/10.17981/ingecuc.16.1.2020.16

[21] Broggi, L., Kemmerer, J., Bandriwskyj, C., Fernández, A., Gangoni, C., and Laura, V.H., Characterization of patients and measures implemented during the pandemic in a high complexity hospital in Argentina: an analysis from a nursing perspective, Salud, Ciencia Y Tecnología, 3, art. 513, 2023. DOI: https://doi.org/10.56294/saludcyt2023513

[22] Tamburis, O., and Esposito, C., Process mining as support to simulation modeling: a hospital-based case study, Simulation Modelling Practice and Theory, 104, art. 102149, 2020. DOI: https://doi.org/10.1016/j.simpat.2020.102149

[23] Homavazir, Z., Nagappan, B., and Singh, A., Exploring the contribution of engineering in enhancing workflow and efficiency in

nursing. Salud, Ciencia y Tecnología, 3(459), pp. 1-9, 2023. DOI: https://doi.org/10.56294/saludcyt2023459

[24] Sánchez-Suárez, Y., Sánchez-Castillo, V., y Gómez-Cano, C.A., Modelo para la gestión de flujos de pacientes, validado en un servicio de cirugía general. Revista Cubana de Medicina Militar [Online]. 53(1), art. 024022338, 2024. [date of reference March 4th of 2024]. Available at: https://revmedmilitar.sld.cu/index.php/mil/article/download/22338/2477

[25] Keshtkar, L., Rashwan, W., Abo-Hamad, W., and Arisha, A., A hybrid system dynamics, discrete event simulation and data envelopment analysis to investigate boarding patients in acute hospitals, Operations Research for Health Care, 26, art. 100266, 2020. DOI: https://doi.org/10.1016/j.orhc.2020.100266

[26] Saeedian, M., Sepehri, M.M., Jalalimanesh, A., and Shadpour, P., Operating room orchestration by using agent-based simulation, Perioperative Care and Operating Room Management, 15, art. 100074, 2019. DOI: https://doi.org/10.1016/j.pcorm.2019.100074

[27] Tyagi, M., Tyagi, P.K., Singh, S., Sathpathy, S., Kant, S., Gupta, S.K., and Singh, R., Impact of application of queuing theory on operational efficiency of patient registration, Medical Journal Armed Forces India, 79(3), pp. 300-308, 2023. DOI: https://doi.org/10.1016/j.mjafi.2021.06.028

[28] Ludbrook, G.L., and Leaman, E., Cost-Effectiveness in perioperative care: application of Markov modeling to pathways of perioperative care, Value in Health, 25(2), pp. 215-221, 2022. DOI: https://doi.org/10.1016/j.jval.2021.07.018

[29] Belciug, S., and Gorunescu, F., A hybrid genetic algorithm-queuing multi-compartment model for optimizing inpatient bed occupancy and associated costs, Artificial Intelligence in Medicine, 68, pp. 59-69, 2016. DOI: https://doi.org/10.1016/j.artmed.2016.03.001

[30] Dauncey, S.J., Kelly, P.A., Baykov, D., Skeldon, A.C., and Whyte, M.B., Rhythmicity of patient flow in an acute medical unit: relationship to hospital occupancy, 7-day working and the effect of COVID-19. QJM: monthly journal of the Association of Physicians, 114(11), pp. 773-779, 2022. DOI: https://doi.org/10.1093/qjmed/hcaa334

[31] Berg, E., Weightman, A.T., and Druga, D.A., Emergency department operations II: patient flow. Emergency Medicine Clinics of North America, 38(2), pp. 323-337, 2020. DOI: https://doi.org/10.1016/j.emc.2020.01.002

[32] Medina-León, S.V., Medina-Palomera, A., y González-Ángeles, Á., Reducir tiempos de espera de pacientes en el departamento de emergencias de un hospital utilizando simulación. Industrial Data [Online]. 13(1), pp. 67-76, 2010. [date of reference September 15th of 2023]. Available at: http://www.redalyc.org/articulo.oa?id=81619989010

[33] Gartner, D., and Kolisch, R., Scheduling the hospital-wide flow of elective patients, European Journal of Operational Research, 233(3), pp. 689-699, 2014. DOI: https://doi.org/10.1016/j.ejor.2013.08.026

[34] Pellizarri, M., La mejora del flujo de pacientes a través del hospital. Revista ITAES [Online]. 17(1), pp. 11-18, 2015. [date of reference September 15th of 2023]. Available at: https://studylib.es/doc/7753042/la-mejora-del-flujo-de-pacientes-a-trav%C3%A9s-del-hospital

[35] Armony, M., Israelit, S., Mandelbaum, A., Marmor, Y.N., Tseytlin, Y., and Yom-Tov, G.B., On patient flow in hospitals: a data-based queueingscience perspective. Stochastic Systems, 5(1), pp. 146-194, 2015. DOI: https://doi.org/10.1287/14-SSY153

[36] Mathews, K.S., and Long, E.F., A conceptual framework for improving critical care patient flow and bed use. Ann Am Thorac Soc, 12(6), pp. 886-894, 2015. DOI: https://doi.org/10.1513/AnnalsATS.201409-419OC

[37] Chen, X., Wang, L., Dingand, J., and Thomas, N., Patient flow scheduling and capacity planning in a smart hospital environment, IEEE Access, 4, pp. 135-148, 2016. DOI: https://doi.org/10.1109/ACCESS.2015.2509013

[38] Andersen, A.R., Nielsen, B.F., Reinhardt, L.B., and Stidsen, T.R., Staff optimization for time-dependent acute patient flow, European Journal of Operational Research, 272(1), pp. 94-105, 2019. DOI: https://doi.org/10.1016/j.ejor.2018.06.015.

[39] Blouin Delisle, C.H., Drolet, R., Hains, M., Tailleur, L., Allaire, N., Coulombe, M., and Vézo, A., Improving interprofessional approach using a collaborative lean methodology in two geriatric care units for a better patient flow, Journal of Interprofessional Education and Practice, 19, pp., 2020. DOI: https://doi.org/10.1016/j.xjep.2020.100332

[40] Vali, M., Salimifard, K., Gandomi, A.H., and Chaussalet, T.J., Application of job shop scheduling approach in green patient flow optimization using a hybrid swarm intelligence, Computers & Industrial Engineering, 172, art. e108603, 2022. DOI: https://doi.org/10.1016/j.cie.2022.108603

[41] Suárez-Gargallo, C., and Zaragoza-Sáez, P., A comprehensive bibliometric study of the balanced scorecard, Evaluation and Program Planning, 97, art. 102256, 2023. DOI: https://doi.org/10.1016/j.evalprogplan.2023.102256

[42] Sánchez-Suárez, Y., Trujillo-García, L., Marqués-León, M., y Santos-Pérez, O., Los indicadores de gestión hospitalarias en tiempos de Covid 19. Visionario Digital, 5(4), pp. 58-77, 2021. https://doi.org/10.33262/visionariodigital.v5i4.1901

[43] Sexton, P., Whiteman, K., George, E.L., Fanning, M., and Stephens, K., Improving PACU throughput using an electronic dashboard: a quality improvement initiative. Journal of PeriAnesthesia Nursing, 37(5), pp. 613-619, 2022. DOI: https://doi.org/10.1016/j.jopan.2021.11.005

[44] Alhabib, D., Alumarn, A., and Alrayes, S., Emergency room visualization dashboard user satisfaction in Saudi Arabia, Informatics in Medicine Unlocked, 21, art. 100493, 2020. DOI: https://doi.org/10.1016/j.imu.2020.100493

[45] Kenigsberg, T.Y.A., Hause, A.M., McNeil, M.M., Nelson, J.C., Ann Shoup, J., Goddard, K., Lou, Y., Hanson, K.E., Glenn, S.C., and Weintraub, E.S., Dashboard development for near real-time visualization of COVID-19 vaccine safety surveillance data in the Vaccine Safety Datalink, Vaccine, 40(22), pp. 3064-3071, 2022. DOI: https://doi.org/10.1016/j.vaccine.2022.04.010

[46] Cinelli, C., Somsen, D., Quinn, A., Horn, N., and Murray, R., Implementation of an electronic dashboard for reporting and tracking of health care professional requirements, Journal of the American College of Radiology, 18(1 Part A), pp. 75-78, 2021. DOI: https://doi.org/10.1016/j.jacr.2020.09.021

[47] Castillo, V.S., Cano, C.A.G., and Gonzalez-Argote, J., Telemedicine and health applications for health monitoring in rural communities in Colombia: a systematic review. EAI Endorsed Transactions on Pervasive Health and Technology, 9(1), pp. 1-17, 2023. DOI: https://doi.org/10.4108/eetpht.9.3400

[48] Hernández-Nariño, A., y Marqués-León, M., Procedimiento de determinación de indicadores. Aplicación a un proceso del Hospital "Mario Muñoz Monroy, Jornada Científica del Hospital "Mario Muñoz Monroy", Matanzas, Cuba, 2006.

[49] Hernández-Nariño, A., Contribución a la gestión y mejora de procesos en instalaciones hospitalarias del territorio matancero, PhD Thesis, Departamento de Ingeniería Industrial, Universidad de Matanzas "Camilo Cienfuegos", Matanzas, Cuba, 2010.

[50] Ramos-Castro, G., Gestión del desempeño del Sistema de Ciencia e Innovación enfocado a los procesos académicos en Salud, PhD Thesis, Departamento de Ingeniería Industrial, Universidad de Matanzas, Matanzas, Cuba, 2022.

[51] Afanador-Cubillos, N., Historia de la producción y sus retos en la era actual, Región Científica, 2(1), art. 202315, 2023. DOI: https://doi.org/10.58763/rc202315

[52] Machuca-Contreras, F., Canova-Barrios, C., y Fabián-Castro, M., Una aproximación a los conceptos de innovación radical, incremental y disruptiva en las organizaciones, Región Científica, 2(1), art. 202324, 2023. DOI: https://doi.org/10.58763/rc202324

[53] Cano, C.A.G., Castillo, V.S., Losada, Y.B., and Monje, M.A.B., Analysis of the risks associated with the provision of services in respiratory diseases ward during the COVID 19 pandemic at the Hospital Maria Inmaculada, Salud, Ciencia y Tecnologia, 2, art. 123, 2022. DOI: https://doi.org/10.56294/saludcyt2022123

[54] Gonzales-Centon, J.M., Chávez-Cubas, W., Berrio-Huillcacuri, J., and Santos-Maldonado, A.B., El crecimiento empresarial y su relación en la rentabilidad de una MYPE del rubro comercial en Arequipa, Perú, Región Científica, 2(1), art. 202387, 2023. DOI: https://doi.org/10.58763/rc202387

[55] García-Peña, M., López-Ocmin, L.S., y Romero-Carazas, R., Control interno de inventario y la gestión de resultados de un emporio

comercial de la región de San Martín - Perú. Región Científica, 2(1), art. 202392, 2023. DOI: https://doi.org/10.58763/rc202392

[56] González-López-Valcárcel, B., and Ortún, V., Reconstrucción del sistema sanitario: gobernanza, organización y digitalización. Informe SESPAS 2022, Gaceta Sanitaria, 36, pp. S44-S50, 2022. DOI: https://doi.org/10.1016/j.gaceta.2022.02.010

[57] Chen, H.-F., Hou, Y.-H., and Chang, R.-E., Application of the balanced scorecard to an academic medical center in Taiwan: the effect of warning systems on improvement of hospital performance, Journal of the Chinese Medical Association, 75(10), pp. 530-535, 2012. DOI: https://doi.org/10.1016/j.jcma.2012.07.007

[58] Mejías, M., Guarate-Coronado, Y.C., and Jiménez-Peralta, A.L., Inteligencia artificial en el campo de la enfermería: implicaciones en la asistencia, administración y educación, Salud, Ciencia y Tecnología, 2(88), pp. 1-7, 2022. DOI: https://doi.org/10.56294/saludcyt202288

[59] Esquer-Rochin, M.A., Gutierrez-Garcia, J.O., Rosales, J.-H., and Rodriguez, L.-F., Design and evaluation of a dashboard to support the comprehension of the progression of patients with dementia in day centers. International Journal of Medical Informatics, 156, art. 104617, 2021 DOI: https://doi.org/10.1016/j.ijmedinf.2021.104617

Y. Sánchez-Suárez, is BSc. Eng. in Industrial Engineering, in 2021, MSc. of Business Administration in 2023, and PhD. in Science, Industrial Technical Engineering all of them from the University of Matanzas, Matanzas, Cuba. He is currently a trainee in the Quality Department of the University of Matanzas. His main research interests include operations management, management, business, supply chain management and hospital management.
ORCID: 0000-0003-1095-1865.

V. Sánchez-Castillo, is BSc. Eng. in Agroecological Engineer from the Universidad de la Amazonia, Colombia. MSc. in Regional Studies in Environment and Development from the Universidad Iberoamericana de Puebla, Mexico. PhD. in Anthropology from the Universidad del Cauca, Colombia. Professor linked to the Universidad de la Amazonia. Associate Researcher at Minciencias. Director of the GIADER Research Group, category A in Minciencias-Colombia.
ORCID: 0000-0002-3669-3123.

C.A. Gómez-Cano, is BSc. in Public Accountant from Universidad de la Amazonia. Public Administrator from Escuela Superior de Administración Pública – ESAP. Business Administrator from Corporación Unificada Nacional de Educación Superior - CUN. Sp. in Pedagogy from the Universidad de la Amazonia, Colombia. Sp. in Public Management from the Escuela Superior de Administración Pública - ESAP. MSc. in Education Sciences from the Universidad de la Amazonia, Colombia MSc. in Management and Evaluation of Investment Projects from the Universidad Externado de Colombia, Bogotá, Colombia. Associate Researcher of the Ministry of Science, Technology and Innovation of Colombia. Professor and Researcher linked to the School of Administrative Sciences of the Corporación Unificada Nacional de Educación Superior - CUN, regional Caquetá.
ORCID: 0000-0003-0425-7201.